DOMINATOR®

DOMESTIC HOT WATER HEATERS AND BOILERS

RBI®

RELIABLE. BOLD. INNOVATIVE.

DOMINATOR®

High Performance Boilers and Water Heaters

The Dominator® from RBI offers superior performance and serviceability in a near-condensing high efficiency, multi-stage boiler. At the heart of the unit is a sealed combustion chamber that provides the flexibility of using outside air or mechanical room air for combustion. The chamber design, with fan-assist, multi-speed blowers and state-of-the-art staging control, offers high efficiency staged firing in a compact package and virtually eliminates heat loss. The Dominator incorporates all the latest technological advances that engineers, contractors, and building owners look for when specifying boilers and water heaters.

Standard Equipment

- Finned Copper Tube Heat Exchanger – Two-Pass
- Mounted & Wired Flow Switch
- FM Compliant Gas Train
- Sealed Combustion Chamber
- Mounted ASME Relief Valve
- Pump Delay Control
- Factory Fired Tested
- ZM Coated Steel Corrosion Resistant Jacket (Indoor/Outdoor)

Dependable, Efficient Performance

- Uginox Alloy Stainless Steel Burners
- Glass Lined Headers
- 2 or 4-Stage Firing Modes (300 On/Off Only)
- Category I & III Venting

*Pool heater applications available in non-U.S. markets only.

Dominator boilers and water heaters are standard with ZM coated steel corrosion resistant jacket ideal for outdoor or indoor installations.

Easy to Install and Service

- Slide-Out Heat Exchanger
- Side Intake, All Sizes
- Rear Intake, Sizes 750-2100
- Stackable Frame (Seismic Approval up to Zone 4)
- Field Reversible Headers
- Low Voltage Controls
- Direct Vent (up to 35' Equivalent)

Optional Features

- Bronze Headers
- Cupro-Nickel Finned Tubes
- Outdoor Installation
- Freeze Protection Package
- Thru-Wall Venting
- CSD-1 Compliant Gas Train and Controls
- Barometric Damper

Load Matching Staged Firing

Unlike most non-condensing units that are limited to only two-stage firing, the Dominator provides up to four-stages of firing, allowing the boiler/water heater to more closely match the heating load. The Dominator utilizes the most advanced Proportional Integral Derivative (P.I.D.) sequencing control on the market to accurately control the staging of the units. The control has six modes of operation that can be field set, with built-in standard features that are options on most competitive units. These standard features include outdoor reset and pump delay on temperature differential between the supply and return temperatures of the unit.

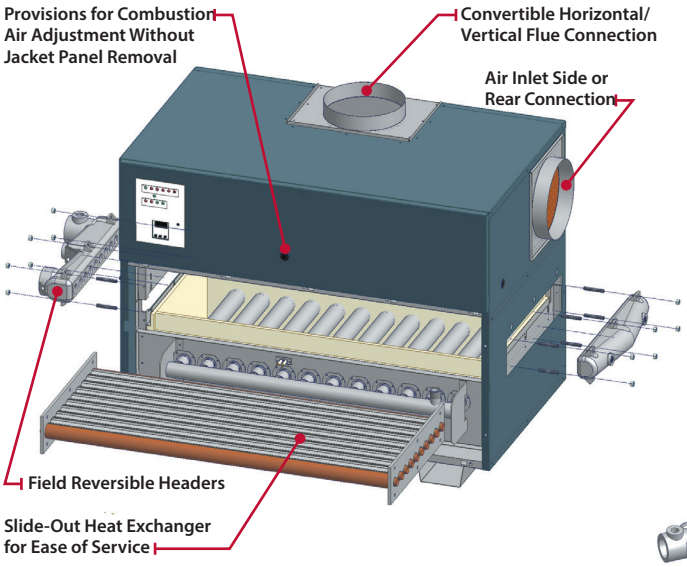

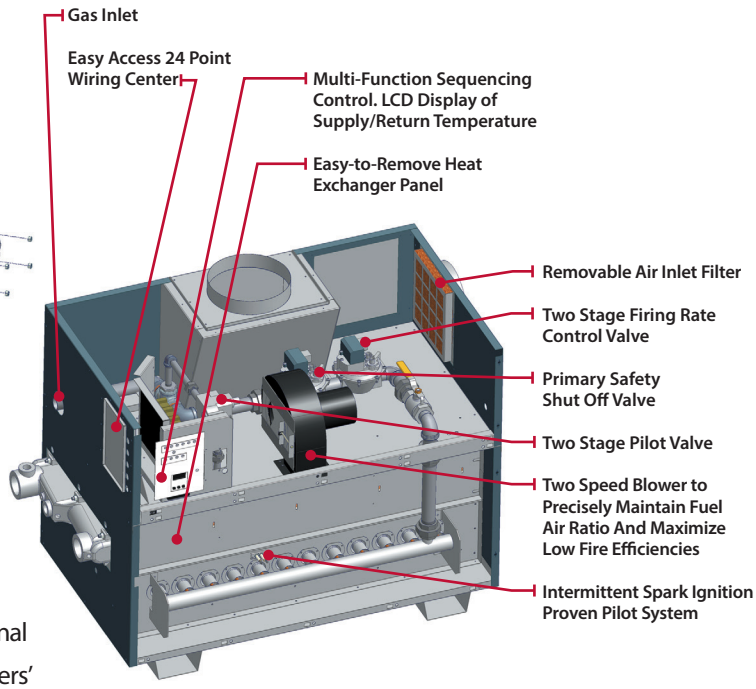

Proven Pilot Ignition System

The unique pilot ignition is safer and more reliable than traditional hot surface systems (HSI) commonly used on other manufacturers' equipment. The system employs a burner tube as a pilot. Gas is injected into a single burner and ignited by spark. A flame rod then monitors the pilot tube flame. Once the pilot is proven the main gas valves are powered and the remaining burner tubes are safely lit. This proven system offers greater dependability and is superior to fragile HSI systems that can require frequent replacement.

"Smart Service" Design

Ease of installation and service are trademarks of all RBI water heaters and boilers. Critical components are fully accessible to make short work of service and maintenance calls. The Dominator is the only sealed combustion chamber boiler/water heater with time-saving service features including a slide-out control cabinet for easy access to wiring and a slide-out heat exchanger for less time-consuming service and repair. And the Dominator is only 29.5" wide to fit easily through standard doorways.

Quality Construction for Dependable Performance

The Dominator features a robust, compact design using high quality materials for dependable performance. From our stainless steel burn tubes to our glass lined headers the Dominator is built not only to perform efficiently, it's built to last. The Dominator is engineered to outperform the competition with stage-firing, easy set-up and technician friendly service and maintenance through the use of fewer components and effortless accessibility.

Wide Variety of Venting Options

The Dominator provides added flexibility and ease of installation with multiple venting options and configurations. The sealed combustion chamber minimizes heat loss and requires less clearance from combustible walls.

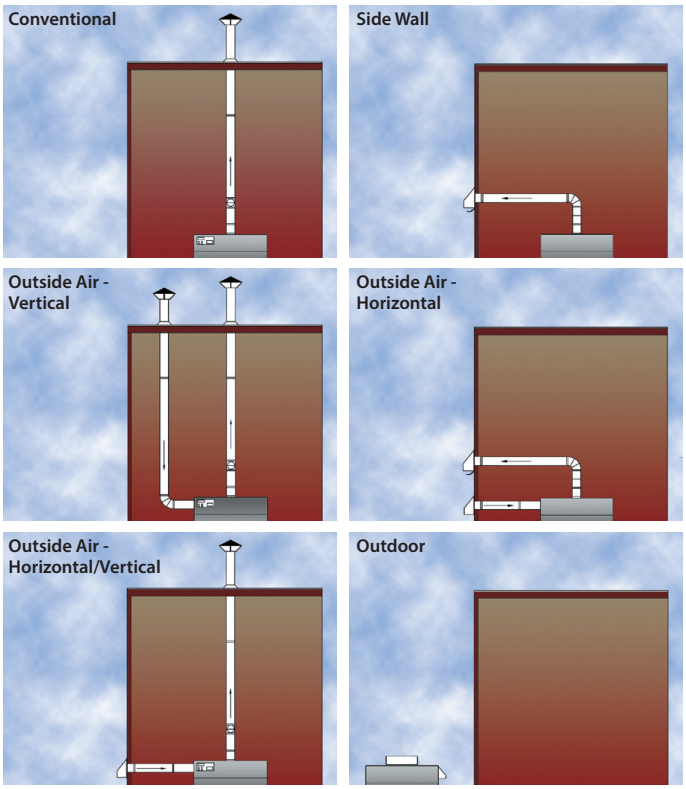

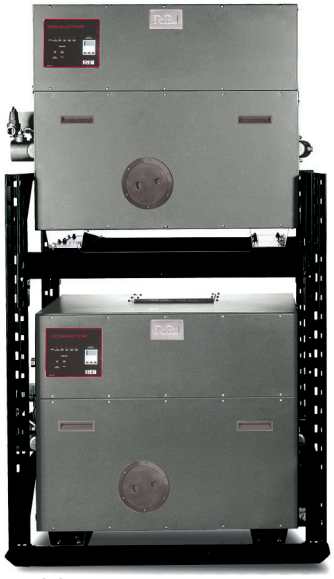

Rack and Stack

The Dominator offers greater flexibility and ease of installation in a space-saving design that leaves more elbowroom in the mechanical room. A rugged frame and stackable design allow you to install two units in the space of one small footprint.

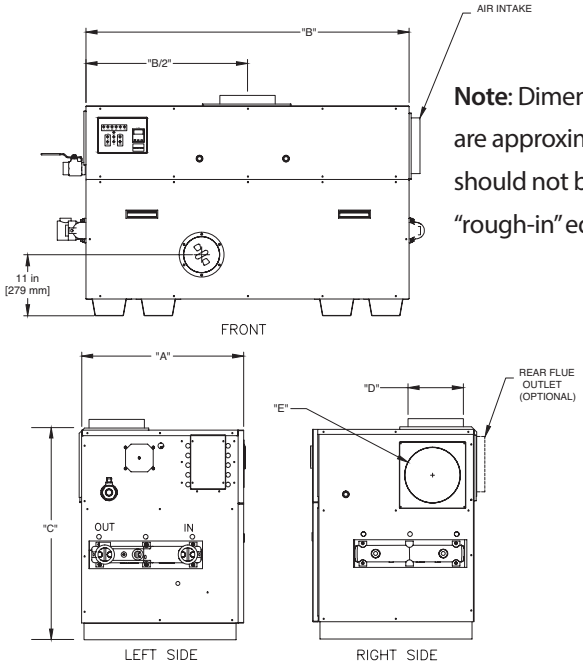

Note: Dimensions are approximate and should not be used to "rough-in" equipment.

Models
DB = Boiler
DW = Water Heater

Dominator — Dimensions and Ratings*

Size	Input MBH	Input kW	Boiler Output MBH	Boiler Output kW	Length Dim. A In.	Length Dim. A mm	Width Dim. B In.	Width Dim. B mm	Height Dim. C In.	Height Dim. C mm	Flue Vent Dim. D In.	Flue Vent Dim. D mm	Ducted Air Dim. E In.	Ducted Air Dim. E mm	Shipping Weight lbs.	Shipping Weight kgs.
300	300	*88*	252	*74*	29-5/16	*745*	22-1/8	*562*	37-7/8	*962*	6	*152*	6	*152*	512	*232*
400	399	*117*	335	*98*	29-5/16	*745*	28-5/8	*727*	37-7/8	*962*	6	*152*	6	*152*	585	*265*
600	600	*176*	504	*148*	29-5/16	*745*	35-1/8	*892*	37-7/8	*962*	7	*178*	8	*203*	625	*284*
750	750	*220*	630	*185*	29-5/16	*745*	41-5/8	*1,057*	37-7/8	*962*	8	*203*	8	*203*	710	*322*
900	900	*264*	756	*222*	29-5/16	*745*	48-1/8	*1,222*	37-7/8	*962*	10	*254*	10	*254*	800	*363*
1050	1,050	*308*	882	*258*	29-5/16	*745*	58-3/8	*1,483*	37-7/8	*962*	10	*254*	10	*254*	915	*415*
1350	1,350	*396*	1134	*332*	29-5/16	*745*	71-3/8	*1,813*	37-7/8	*962*	12	*305*	12	*305*	975	*442*
1500	1,500	*440*	1260	*369*	29-5/16	*745*	77-7/8	*1,978*	37-7/8	*962*	14**	*356*	12	*305*	1,015	*460*
1950	1,950	*572*	1638	*480*	29-5/16	*745*	97-3/8	*2,473*	37-7/8	*962*	14**	*356*	12	*305*	1,285	*583*
2100	2,100	*616*	1764	*517*	29-5/16	*745*	103-7/8	*2,638*	37-7/8	*962*	14**	*356*	12	*305*	1,300	*590*

* Ratings reflect boilers only. For boiler efficiency information please visit www.ahridirectory.org.
** 14" oval to round transition piece.

Dominator Boilers — Temperature Rise/Pressure Drop

Size	15°F Flow Rate GPM	15°F Pres Drop Ft	8.3°C Flow Rate ΔL/s	8.3°C Pres Drop kPa	20°F Flow Rate GPM	20°F Pres Drop Ft	11.1°C Flow Rate ΔL/s	11.1°C Pres Drop kPa	25°F Flow Rate GPM	25°F Pres Drop Ft	13.9°C Flow Rate ΔL/s	13.9°C Pres Drop kPa	30°F Flow Rate GPM	30°F Pres Drop Ft	16.7°C Flow Rate ΔL/s	16.7°C Pres Drop kPa	35°F Flow Rate GPM	35°F Pres Drop Ft	19.4°C Flow Rate ΔL/s	19.4°C Pres Drop kPa
300	33.6	0.21	*2.1*	*0.6*	25.2	0.13	*1.6*	*0.4*	20.2	0.08	*1.3*	*0.2*	-	-	-	-	-	-	-	-
400	44.7	0.48	*2.8*	*1.4*	33.5	0.28	*2.1*	*0.8*	26.8	0.19	*1.7*	*0.5*	-	-	-	-	-	-	-	-
600	67.2	1.27	*4.2*	*3.7*	50.4	0.75	*3.2*	*2.2*	40.3	0.49	*2.5*	*1.5*	33.6	0.35	*2.1*	*1.0*	-	-	-	-
750	84.0	2.30	*5.3*	*6.8*	63.0	1.35	*4.0*	*4.0*	50.4	0.89	*3.2*	*2.6*	42.0	0.64	*2.6*	*1.9*	36.0	0.48	*2.3*	*1.4*
900	100.8	3.75	*6.4*	*11.0*	75.6	2.20	*4.8*	*6.5*	60.5	1.46	*3.8*	*4.3*	50.4	1.04	*3.2*	*3.1*	43.2	0.78	*2.7*	*2.3*
1050	117.6†	6.08	*7.4*	*17.9*	88.2	3.57	*5.6*	*10.5*	70.6	2.36	*4.5*	*7.0*	58.8	1.68	*3.7*	*5.0*	50.4	1.27	*3.2*	*3.7*
1350	-	-	-	-	113.4†	7.00	*7.2*	*20.6*	90.7	4.63	*5.7*	*13.6*	75.6	3.30	*4.8*	*9.7*	64.8	2.48	*4.1*	*7.3*
1500	-	-	-	-	-	-	-	-	100.8	6.16	*6.4*	*18.1*	84.0	4.39	*5.3*	*12.9*	72.0	3.30	*4.5*	*9.7*
1950	-	-	-	-	-	-	-	-	-	-	-	-	109.2†	8.98	*6.9*	*26.4*	93.6	6.75	*5.9*	*19.9*
2100	-	-	-	-	-	-	-	-	-	-	-	-	117.6†	11.0	*7.4*	*32.4*	100.8	8.27	*6.4*	*24.4*

† Flow exceeds recommended maximum use a greater temperature rise or consult manufacturer. Cupro-nickel heat exchanger should be considered.

Dominator Water Heaters — Hourly Recovery Capacity ΔT (GPH & LPH)***

Size	40°F	22°C	60°F	33°C	80°F	44°C	100°F	56°C	120°F	67°C	140°F	78°C
300	720	*2,723*	480	*1,815*	360	*1,361*	288	*1,089*	240	*908*	206	*778*
600	1,495	*5,650*	996	*3,766*	747	*2,825*	598	*2,260*	498	*1,883*	427	*1,614*
750	1,868	*7,062*	1,245	*4,708*	934	*3,531*	747	*2,825*	623	*2,354*	534	*2,018*
900	2,242	*8,474*	1,495	*5,650*	1,121	*4,237*	897	*3,390*	747	*2,825*	641	*2,421*
1050	2,584	*9,768*	1,723	*6,512*	1,292	*4,884*	1,034	*3,907*	861	*3,256*	738	*2,791*
1350	3,322	*12,558*	2,215	*8,372*	1,661	*6,279*	1,329	*5,023*	1,107	*4,186*	949	*3,588*
1500	3,691	*13,954*	2,461	*9,303*	1,846	*6,977*	1,477	*5,582*	1,230	*4,651*	1,055	*3,987*
1950	4,799	*18,140*	3,199	*12,093*	2,399	*9,070*	1,920	*7,256*	1,600	*6,047*	1,371	*5,183*
2100	5,168	*19,535*	3,445	*13,024*	2,584	*9,768*	2,067	*7,814*	1,723	*6,512*	1,477	*5,582*

Boilers & Water Heaters not available for sale in Canada due to NRCan regulations.
*** For water heater efficiency information please visit www.ahridirectory.org.

RBI®
RELIABLE. BOLD. INNOVATIVE.

260 North Elm Street, Westfield, MA 01085
Tel. 833-265-5371
www.rbiwaterheaters.com

7555 Tranmere Drive, Mississauga, Ontario L5S 1L4
Tel. (905) 670-5888

A MESTEK COMPANY

In the interest of product improvement, RBI reserves the right to make changes without notice.